REV.	ECN NO	LOCATIONS	DESCRIPTION	DATE

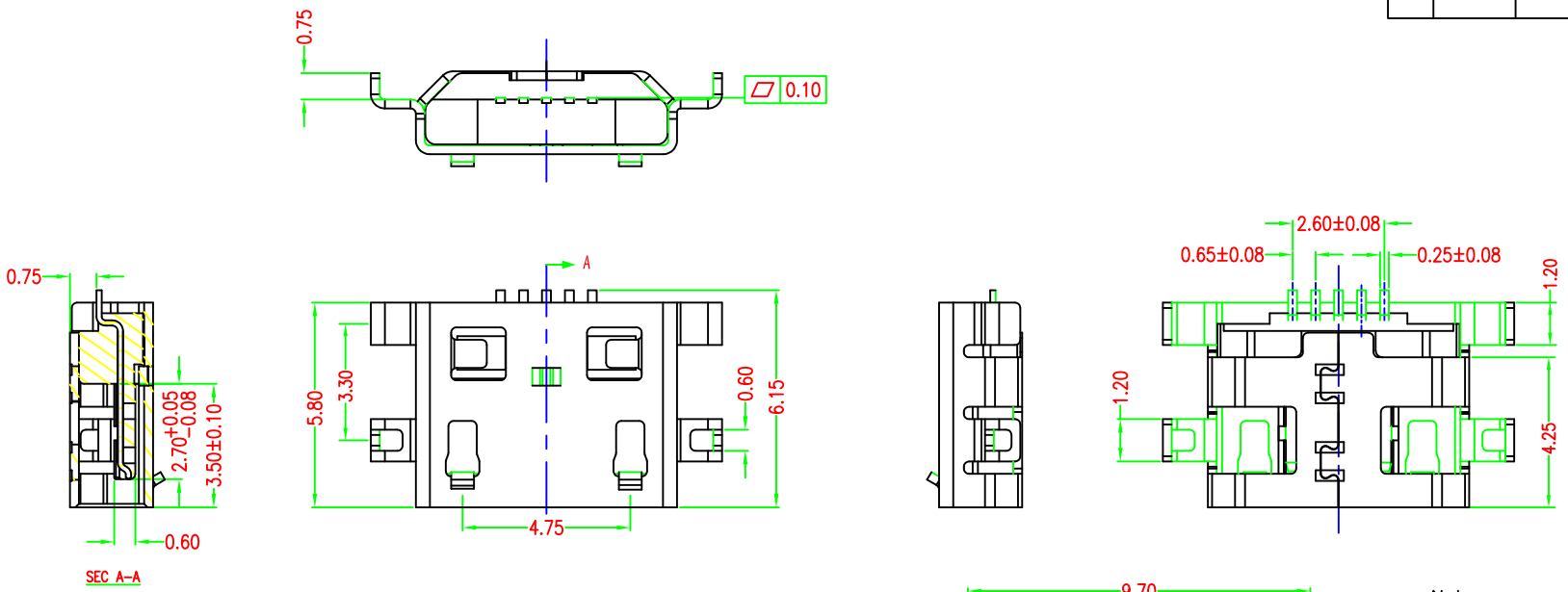

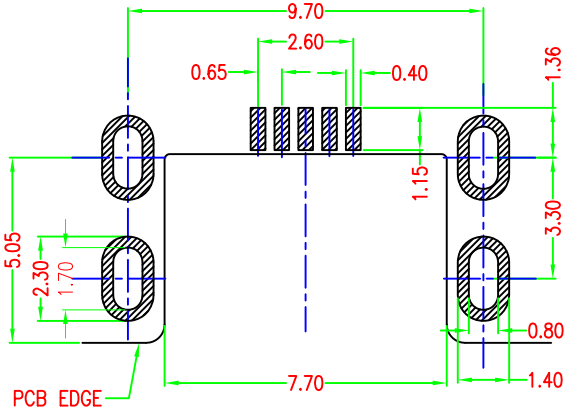

RECOMMANDED PCB LAYOUT

PCB图仅供参考

Note:

1.Material:

1.1 Housing: High temperature thermoplastic with g.f,UL94v-0

1.2 Contact: copper alloy,t=0.15mm

1.3 Shell: copper alloy,t=0.25mm

2.Specification:

2.1 Current rating:1,5PIN 1.8A Max/2,3,4PIN 1A Max.

2.2 Dielectric withstanding voltage: 100 V(ac) for 1 min.

2.3 Contact resistance: 30 mΩ Max.

2.4 Insulation resistance: 100 MΩ Min.

2.5 Total mating force: 3.57 Kgf Max.

2.6 Total unmating force: 1.0 Kgf Min.

2.7 Temperature range: -30°C~80°C

A 01 S B X X X X X XX-367

① ② ③ ④ ⑤ ⑥ ⑦ ⑧ ⑨ ⑩ ⑪

⑤ 外壳材质 1:C2680R-H

⑥ 外壳电镀 1:N50u'' 2:雾T50u'' 3:N+Au1u''(脚) 4:Au1u''

⑦ 端子材质 4:C5191R-EH

⑧ 主体材质 1:LCP

⑨ 主体颜色 B:黑色

⑩ 端子电镀 01:Au1u'';02:Au1.5u'';03:Au3u'' 05:Au5u'' ;10:Au10u'';15:Au15u'';30:Au30u''

PART NO: A01SBXXXXXXX-367		MATERAL: SEE NOTE	
MODEL NO: XX		FINSH: SEE NOTE	
UNIT: MM	SIZE: A4	COLOR: SEE NOTE	TITLE: Micro usb 5s B Type Smt沉板式0.8四脚全插无导位有孔
TOLERANCE UNSPECIFIED		DR: xiayouhong	DWG NO: A367 / REV: A
.x ±0.15		CHK:	
.xx ±0.10			
.xxx ±0.05		APP:	SCALE: 5:1 / DATE: 2014.03.01
Ang. ±1°			